FHWA REGION	STATE	FED. AID PROJ. NO.	SHEET NO.	TOTAL SHEETS
3	MD.	IX-3057 (2)	8.1	8.7 / 196

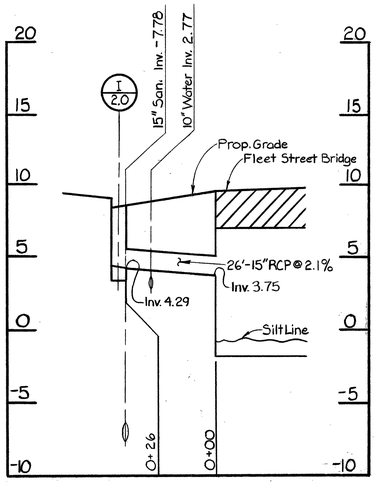

STA. 9+83 Lt.

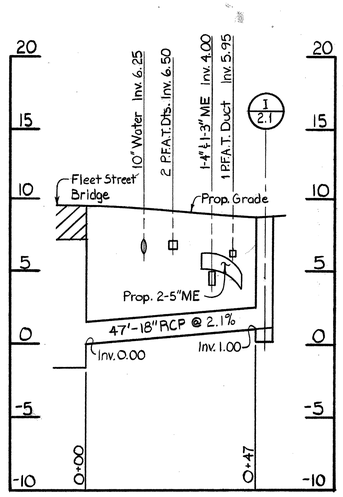

STA. 9+56 Rt.

Note: For location of Prop 2-5" ME, see sheet 5.2 & 6.1

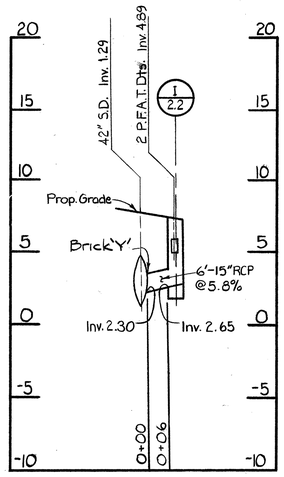

STA. 11+69 Rt.

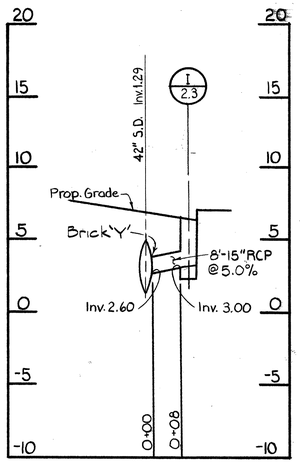

STA. 12+72 Rt.

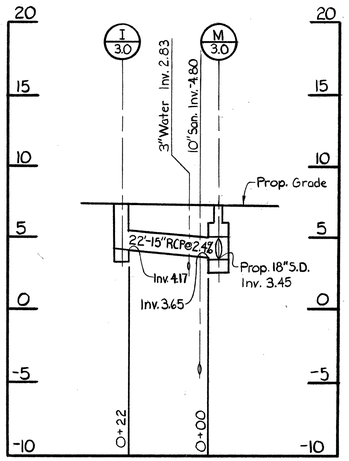

STA. 13+33 Lt.

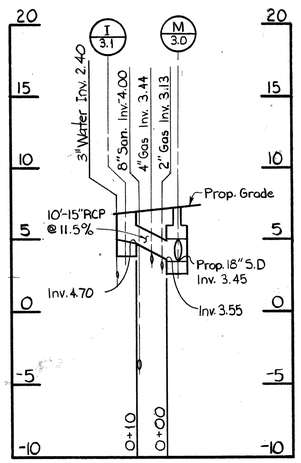

STA. 13+53 Lt.

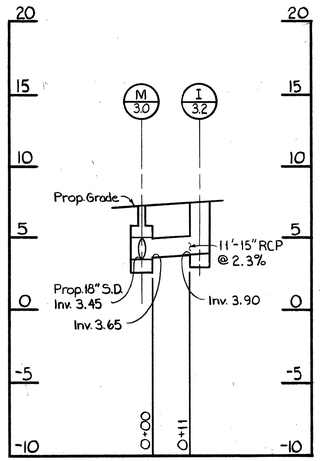

STA. 14+74 Lt.

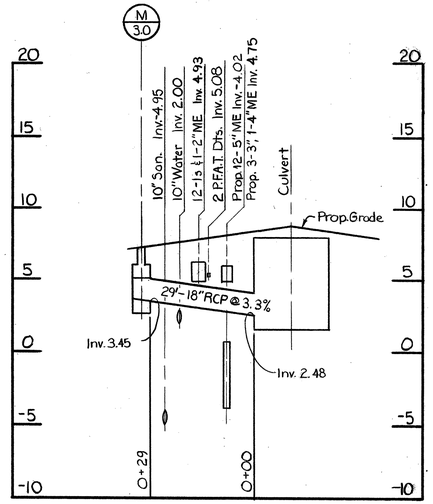

STA. 13+59 Lt.

Note: For location of Prop. 12-5", 3-3" & 1-4" ME, see sheet 5.3 & 6.2

GENERAL STORM DRAIN NOTES

1. Pipe length & slope shown are computed to a point 11' from the ℄ Construction
2. Pipe shall maintain indicated slope to inside face new culvert construction or existing culvert as encountered.
3. When the proposed R.C.P. is laid beneath an existing utility, and within 1 vertical foot of the existing utility, a sand cushion will be installed between the two utilities as directed by the engineer.
4. Existing clearwater drains shall be re-connected to proposed inlets or manholes as directed by the engineer.

REVISIONS	CONSULTANT	CITY OF BALTIMORE DEPARTMENT OF PUBLIC WORKS & STATE HIGHWAY ADMINISTRATION OF MARYLAND INTERSTATE DIVISION FOR BALTIMORE CITY
	Purdum & Jeschke Civil Engineers, 1029 N. Calvert Street, Baltimore, Md. 21202	RECONSTRUCTION OF CENTRAL AVENUE INLET CONNECTION PROFILES SCALE: Horiz: 1"=20' Vert: 1"=5' DATE: 12/23/85

DRAWN BY JMJ; TRACED BY JMJ, SAG; DES. BY JMJ; CHK. BY CGW
F.A.P. NO. IX 3057 (2); S.H.A. NO. BC 311-107-815; BALTO. CITY NO. 3052
SHEET NO. 8.1 OF 8.7 / 196

B