REVISIONS			
NO.	DESCRIPTIONS	DATE	BY

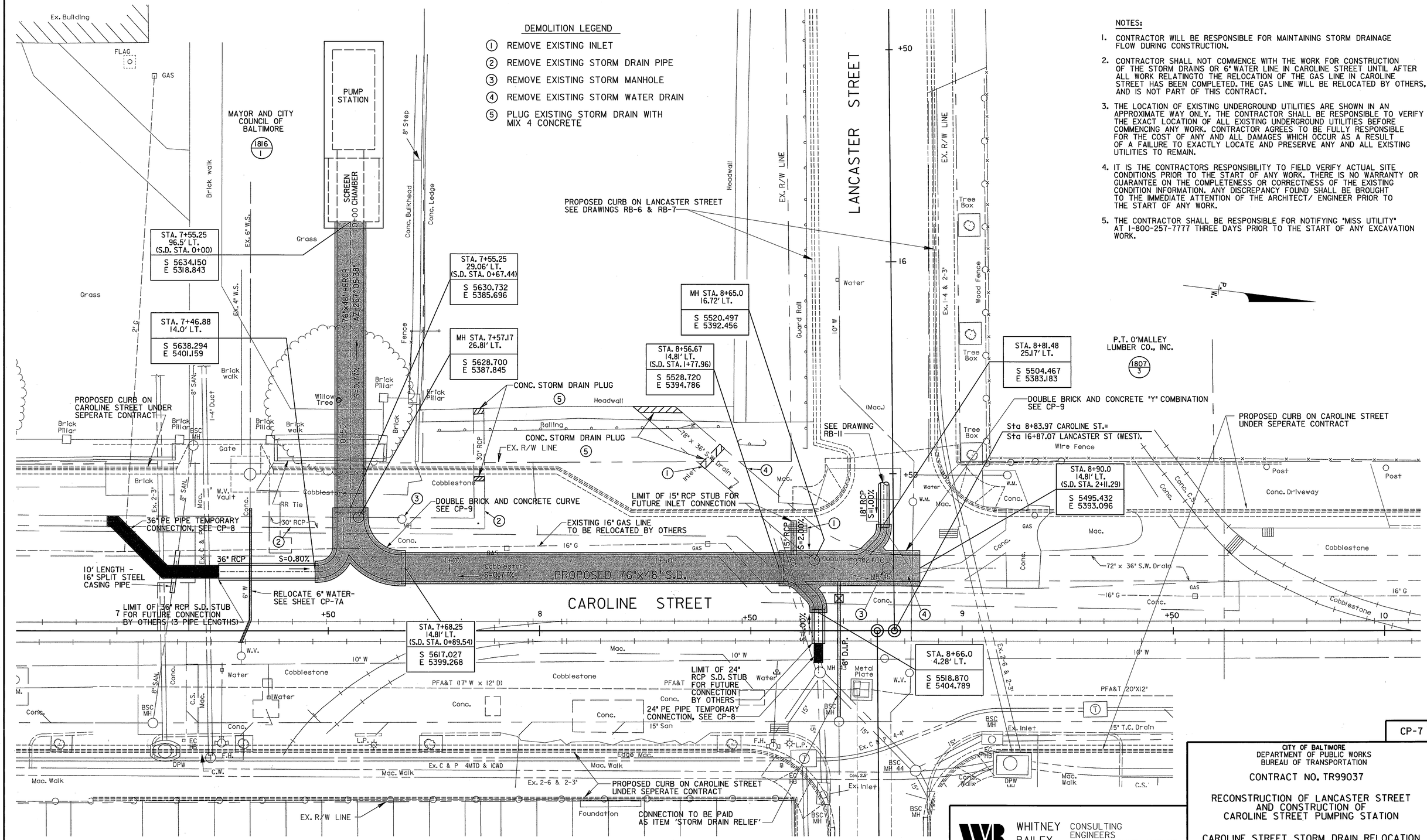

DEMOLITION LEGEND

1. REMOVE EXISTING INLET
2. REMOVE EXISTING STORM DRAIN PIPE
3. REMOVE EXISTING STORM MANHOLE
4. REMOVE EXISTING STORM WATER DRAIN
5. PLUG EXISTING STORM DRAIN WITH MIX 4 CONCRETE

NOTES:

1. CONTRACTOR WILL BE RESPONSIBLE FOR MAINTAINING STORM DRAINAGE FLOW DURING CONSTRUCTION.
2. CONTRACTOR SHALL NOT COMMENCE WITH THE WORK FOR CONSTRUCTION OF THE STORM DRAINS OR 6" WATER LINE IN CAROLINE STREET UNTIL AFTER ALL WORK RELATINGTO THE RELOCATION OF THE GAS LINE IN CAROLINE STREET HAS BEEN COMPLETED. THE GAS LINE WILL BE RELOCATED BY OTHERS, AND IS NOT PART OF THIS CONTRACT.
3. THE LOCATION OF EXISTING UNDERGROUND UTILITIES ARE SHOWN IN AN APPROXIMATE WAY ONLY. THE CONTRACTOR SHALL BE RESPONSIBLE TO VERIFY THE EXACT LOCATION OF ALL EXISTING UNDERGROUND UTILITIES BEFORE COMMENCING ANY WORK. CONTRACTOR AGREES TO BE FULLY RESPONSIBLE FOR THE COST OF ANY AND ALL DAMAGES WHICH OCCUR AS A RESULT OF A FAILURE TO EXACTLY LOCATE AND PRESERVE ANY AND ALL EXISTING UTILITIES TO REMAIN.
4. IT IS THE CONTRACTORS RESPONSIBILITY TO FIELD VERIFY ACTUAL SITE CONDITIONS PRIOR TO THE START OF ANY WORK. THERE IS NO WARRANTY OR GUARANTEE ON THE COMPLETENESS OR CORRECTNESS OF THE EXISTING CONDITION INFORMATION. ANY DISCREPANCY FOUND SHALL BE BROUGHT TO THE IMMEDIATE ATTENTION OF THE ARCHITECT/ ENGINEER PRIOR TO THE START OF ANY WORK.
5. THE CONTRACTOR SHALL BE RESPONSIBLE FOR NOTIFYING "MISS UTILITY" AT 1-800-257-7777 THREE DAYS PRIOR TO THE START OF ANY EXCAVATION WORK.

CP-7

CITY OF BALTIMORE
DEPARTMENT OF PUBLIC WORKS
BUREAU OF TRANSPORTATION

CONTRACT NO. TR99037

RECONSTRUCTION OF LANCASTER STREET AND CONSTRUCTION OF CAROLINE STREET PUMPING STATION

CAROLINE STREET STORM DRAIN RELOCATION PLAN

WHITNEY BAILEY COX MAGNANI
CONSULTING ENGINEERS
849 FAIRMOUNT AVENUE
SUITE 100
BALTIMORE, MD 21286
(410) 512-4500

DRAWN BY R.J.B.
EXAMINED BY W.M.Y.

SCALE: 1"=10' DATE: 07-May-99 10:11
TRANSPORTATION ENGINEERING DIVISION SHEET 46 OF 66

FILE: p:\1997\971270ll\psdrreloc.dgn
DATE: 07-May-99 10:11

REVISIONS			
NO.	DESCRIPTIONS	DATE	BY
1	MODIFY NOTES 1&2, ADD NOTE 6.	6/18/99	PFW

DEMOLITION LEGEND

1. REMOVE EXISTING INLET
2. REMOVE EXISTING STORM DRAIN PIPE
3. REMOVE EXISTING STORM MANHOLE
4. REMOVE EXISTING STORM WATER DRAIN
5. PLUG EXISTING STORM DRAIN WITH MIX 4 CONCRETE

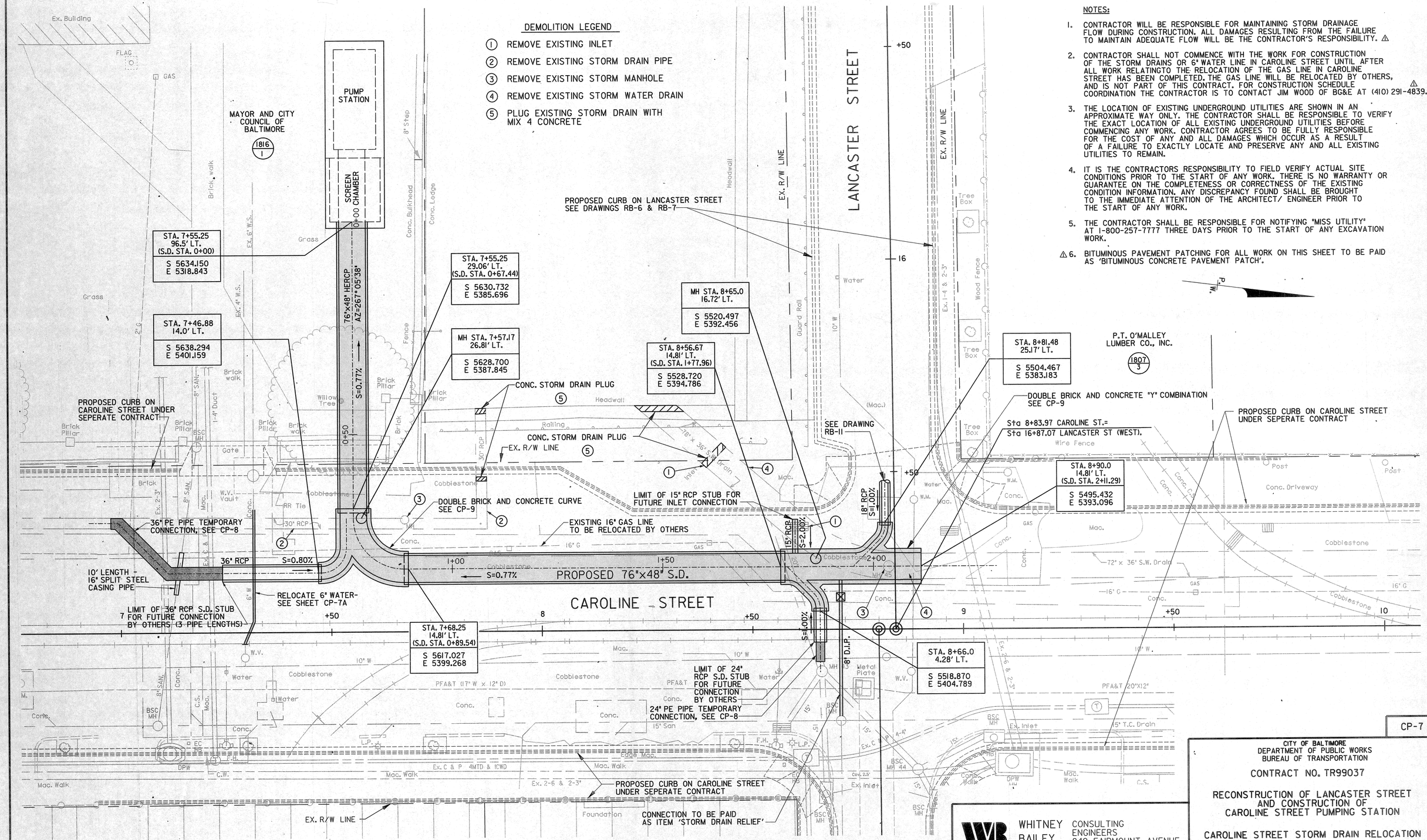

NOTES:

1. CONTRACTOR WILL BE RESPONSIBLE FOR MAINTAINING STORM DRAINAGE FLOW DURING CONSTRUCTION. ALL DAMAGES RESULTING FROM THE FAILURE TO MAINTAIN ADEQUATE FLOW WILL BE THE CONTRACTOR'S RESPONSIBILITY. △1
2. CONTRACTOR SHALL NOT COMMENCE WITH THE WORK FOR CONSTRUCTION OF THE STORM DRAINS OR 6" WATER LINE IN CAROLINE STREET UNTIL AFTER ALL WORK RELATINGTO THE RELOCATION OF THE GAS LINE IN CAROLINE STREET HAS BEEN COMPLETED. THE GAS LINE WILL BE RELOCATED BY OTHERS, AND IS NOT PART OF THIS CONTRACT. FOR CONSTRUCTION SCHEDULE COORDINATION THE CONTRACTOR IS TO CONTACT JIM WOOD OF BG&E AT (410) 291-4839. △1
3. THE LOCATION OF EXISTING UNDERGROUND UTILITIES ARE SHOWN IN AN APPROXIMATE WAY ONLY. THE CONTRACTOR SHALL BE RESPONSIBLE TO VERIFY THE EXACT LOCATION OF ALL EXISTING UNDERGROUND UTILITIES BEFORE COMMENCING ANY WORK. CONTRACTOR AGREES TO BE FULLY RESPONSIBLE FOR THE COST OF ANY AND ALL DAMAGES WHICH OCCUR AS A RESULT OF A FAILURE TO EXACTLY LOCATE AND PRESERVE ANY AND ALL EXISTING UTILITIES TO REMAIN.
4. IT IS THE CONTRACTORS RESPONSIBILITY TO FIELD VERIFY ACTUAL SITE CONDITIONS PRIOR TO THE START OF ANY WORK. THERE IS NO WARRANTY OR GUARANTEE ON THE COMPLETENESS OR CORRECTNESS OF THE EXISTING CONDITION INFORMATION. ANY DISCREPANCY FOUND SHALL BE BROUGHT TO THE IMMEDIATE ATTENTION OF THE ARCHITECT/ ENGINEER PRIOR TO THE START OF ANY WORK.
5. THE CONTRACTOR SHALL BE RESPONSIBLE FOR NOTIFYING "MISS UTILITY" AT 1-800-257-7777 THREE DAYS PRIOR TO THE START OF ANY EXCAVATION WORK.

△1 6. BITUMINOUS PAVEMENT PATCHING FOR ALL WORK ON THIS SHEET TO BE PAID AS 'BITUMINOUS CONCRETE PAVEMENT PATCH'.

CP-7

CITY OF BALTIMORE
DEPARTMENT OF PUBLIC WORKS
BUREAU OF TRANSPORTATION

CONTRACT NO. TR99037

RECONSTRUCTION OF LANCASTER STREET AND CONSTRUCTION OF CAROLINE STREET PUMPING STATION

CAROLINE STREET STORM DRAIN RELOCATION PLAN

WHITNEY BAILEY COX MAGNANI
CONSULTING ENGINEERS
849 FAIRMOUNT AVENUE
SUITE 100
BALTIMORE, MD 21286
(410) 512-4500

DRAWN BY R.J.B.
EXAMINED BY W.M.Y.

SCALE: 1"=10'
DATE: 15-Jun-99 10:41
TRANSPORTATION ENGINEERING DIVISION
SHEET 46R OF 66

FILE: p:\1997\9712701\\dgn\psdreloc.dgn
DATE: 15-Jun-99 10:41

REVISIONS			
NO.	DESCRIPTIONS	DATE	BY

MANHOLE TOP ELEVATIONS SHOWN ON THE PROFILE ARE FOR FUTURE FINISHED GRADE ELEVATIONS. CONTRACTOR SHALL CONSTRUCT MANHOLE TOP ELEVATIONS TO MATCH THOSE OF EXISTING GRADE ELEVATIONS.

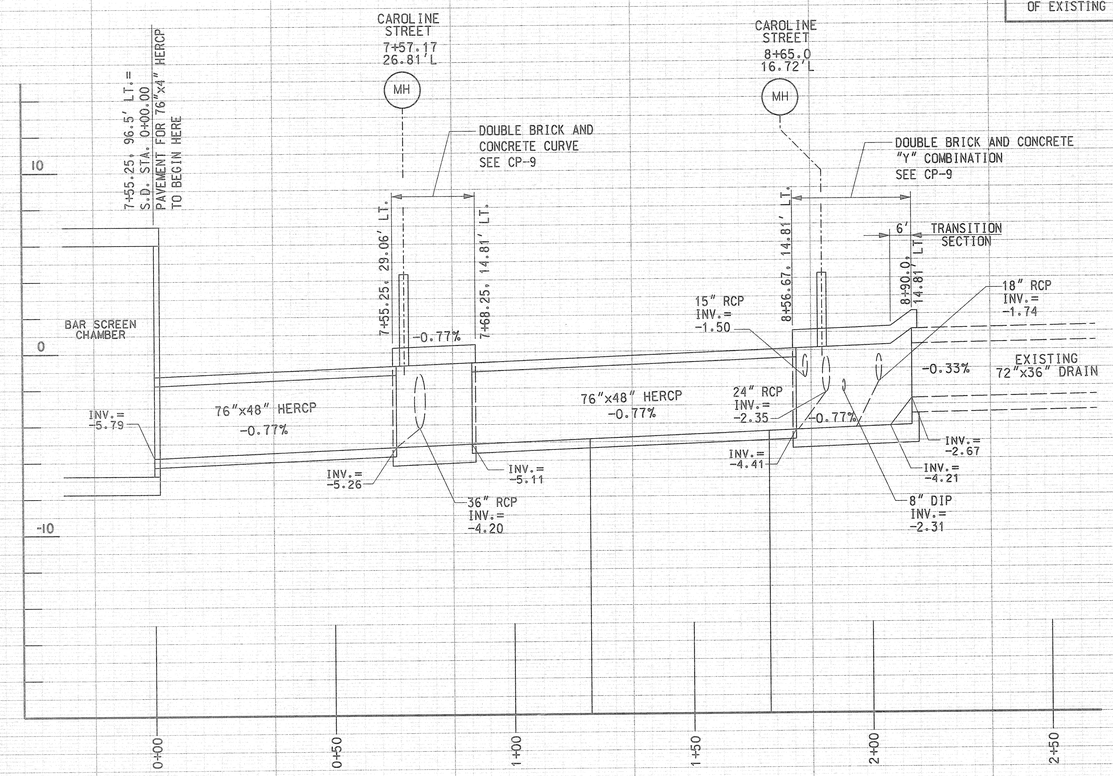

PROFILE - STORM DRAIN RELOCATION

SCALE: HORIZ. 1"=20', VERT. 1"=4'

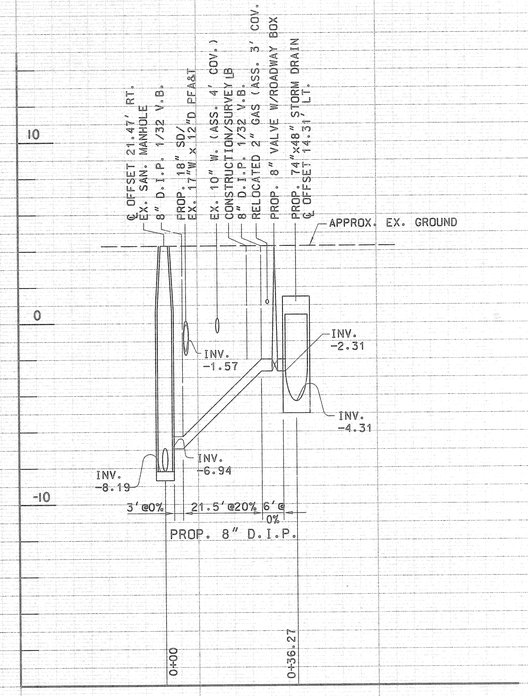

STORM DRAIN PROFILE
S. CAROLINE STREET @ STA. 8+71.25

SCALE: HORIZ. 1"=20', VERT. 1"=4'

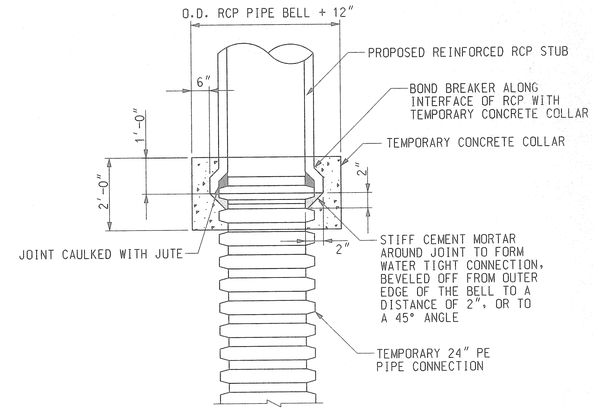

PLAN - TEMPORARY PE PIPE CONNECTION TO R.C. PIPE STUB

NOT TO SCALE

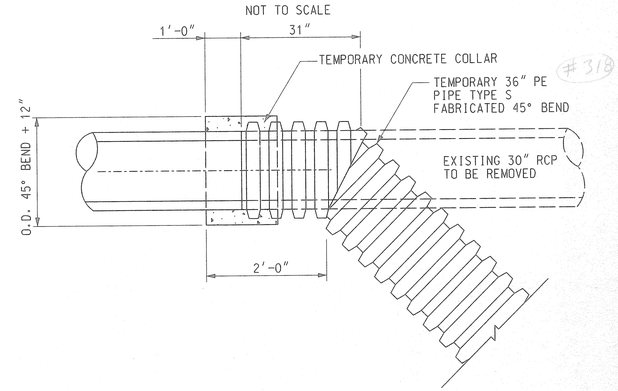

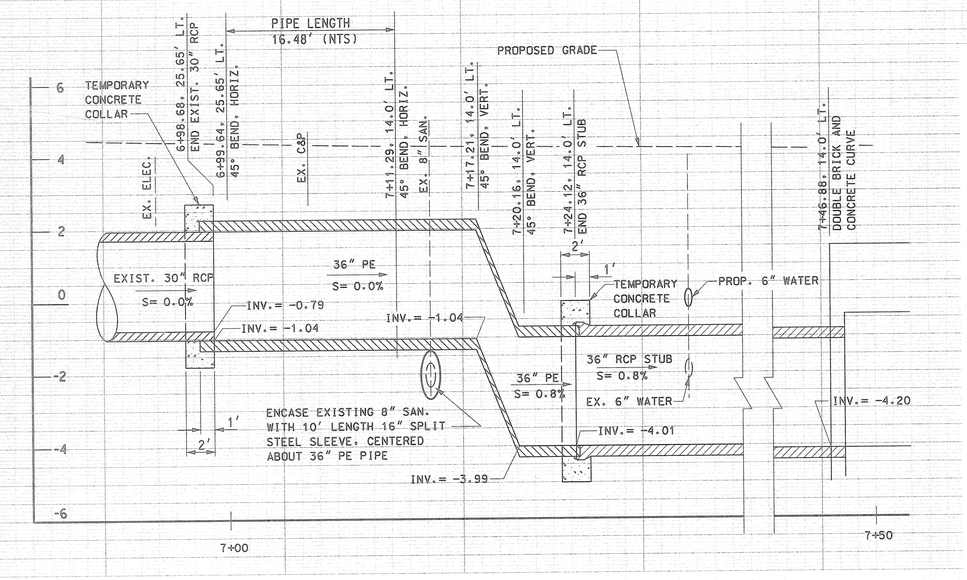

36" PE PIPE PROFILE
TEMPORARY CONNECTION

SCALE: HORIZ. 1"=5', VERT. 1"=2'

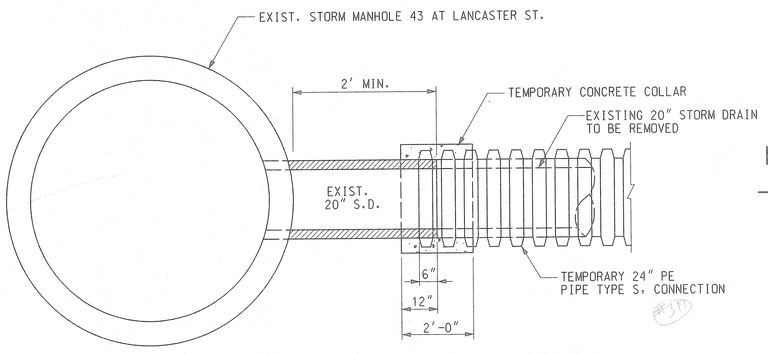

PLAN - TEMPORARY PE PIPE CONNECTION TO EXISTING 20" STORM DRAIN

NOT TO SCALE

PLAN - TEMPORARY PE PIPE CONNECTION TO EXISTING 30" STORM DRAIN

NOT TO SCALE

CP-8

CITY OF BALTIMORE
DEPARTMENT OF PUBLIC WORKS
BUREAU OF TRANSPORTATION

CONTRACT NO. TR99037

RECONSTRUCTION OF LANCASTER STREET AND CONSTRUCTION OF CAROLINE STREET PUMPING STATION

CAROLINE STREET STORM DRAIN RELOCATION PROFILE & DETAILS

SCALE: AS SHOWN | DATE: MAY 1999

TRANSPORTATION ENGINEERING DIVISION | SHEET 47 OF 66

WHITNEY BAILEY COX MAGNANI
CONSULTING ENGINEERS
849 FAIRMOUNT AVENUE
SUITE 100
BALTIMORE, MD 21286
(410) 512-4500

DRAWN BY R.J.B.
EXAMINED BY W.M.Y.

FILE: p:\1997\9712701\prDRELOC.dgn
DATE: 07-May-99 09:58

P:\1997\97127001\CADD\97127S01.DWG

REVISIONS			
NO.	DESCRIPTIONS	DATE	BY

NOTES:

CONCRETE STRENGTH – f'c = 4000 psi AT 28 DAYS
TABLE 20.07-5 MIX NO. 5 TYPE 1 OR 1A CEMENT

REINFORCING – ASTM A615 GRADE 60

GROUT INFILL – f'c = 3000 psi AT 28 DAYS

MANHOLE TOP ELEVATIONS SHOWN ON THE PLANS AND SECTIONS ARE THOSE FOR FUTURE FINISHED GRADE ELEVATIONS. CONTRACTOR SHALL CONSTRUCT MANHOLE TOP ELEVATIONS TO MATCH THOSE OF EXISTING GRADE ELEVATIONS.

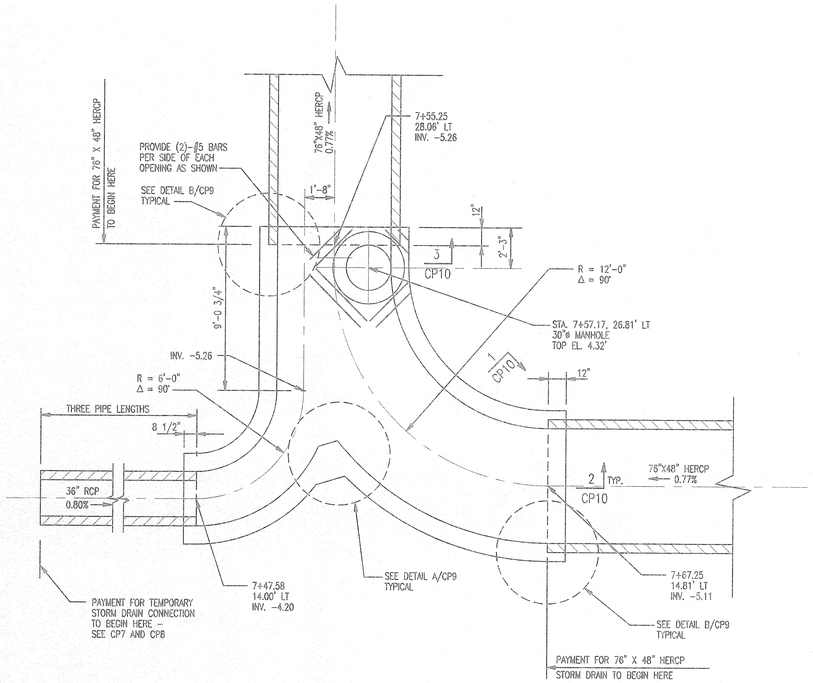

PLAN AT DOUBLE BRICK AND CONCRETE CURVE

1/4" = 1'-0"

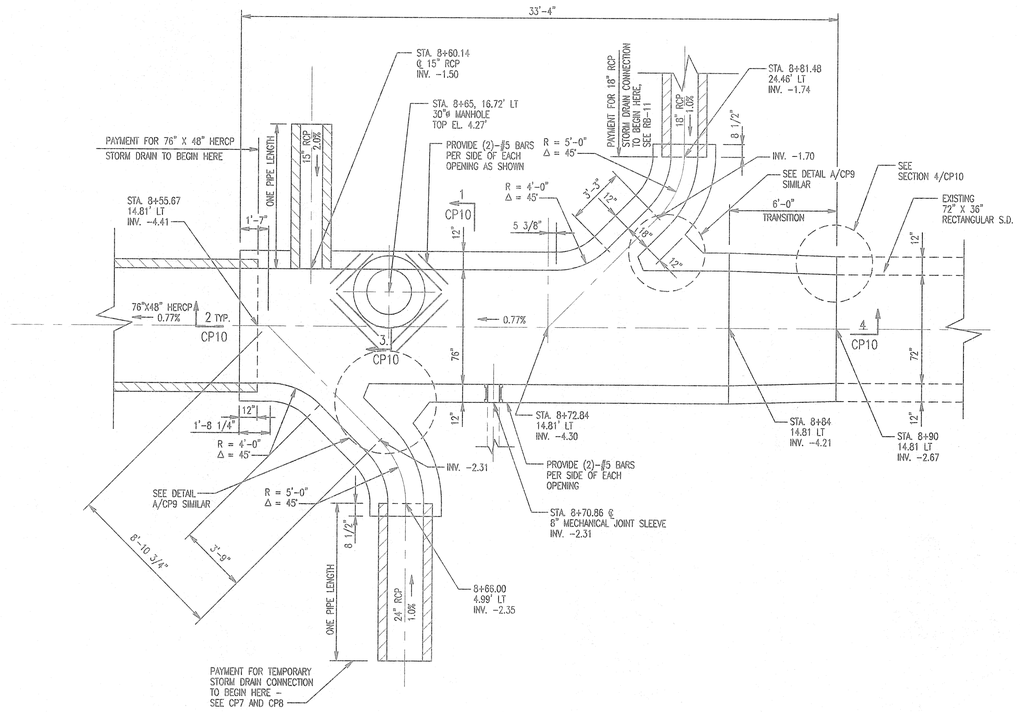

PLAN AT DOUBLE BRICK AND CONCRETE "Y" COMBINATION

1/4" = 1'-0"

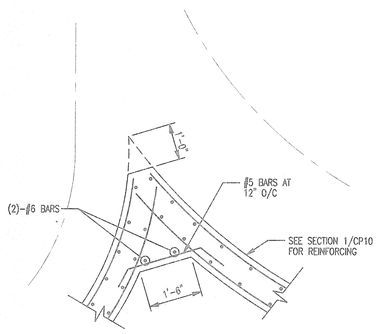

DETAIL A/CP9

1/2" = 1'-0"

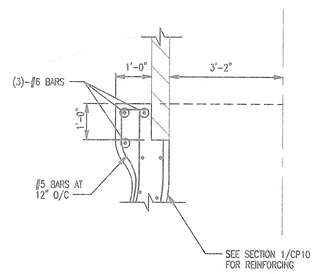

DETAIL B/CP9

1/2" = 1'-0"

CAUTION:
IF THIS DRAWING IS A REDUCTION, USE THE GRAPHIC SCALES.

1/4"=1'-0" 0 1 4 8 12

1/2"=1'-0" 0 1 2 4 6

Book Nos:
x-914, x-939, x-939'A', x-939'B'

DRAWN BY _____

EXAMINED BY _____

WHITNEY BAILEY COX MAGNANI
CONSULTING ENGINEERS
849 FAIRMOUNT AVENUE
SUITE 100
BALTIMORE, MD 21286
(410) 512-4500

CP-9

CITY OF BALTIMORE
DEPARTMENT OF PUBLIC WORKS
BUREAU OF TRANSPORTATION

CONTRACT NO. TR99037
RECONSTRUCTION OF LANCASTER STREET
AND CONSTRUCTION OF
CAROLINE STREET PUMPING STATION

DOUBLE BRICK AND CONCRETE CURVE
AND
DOUBLE BRICK AND CONCRETE "Y" COMBINATION
PLANS AND DETAILS

SCALE: AS NOTED DATE: MAY 03, 1999

TRANSPORTATION ENGINEERING DIVISION SHEET 48 OF 66

P:\1997\97127001\CADD\97127S02.DWG

REVISIONS			
NO.	DESCRIPTIONS	DATE	BY

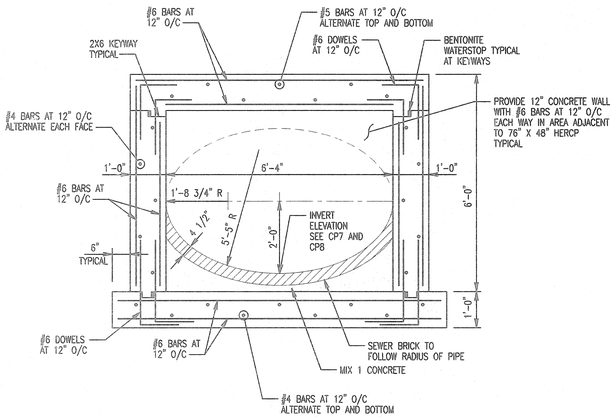

SECTION 1/CP10

1/2" = 1'-0"

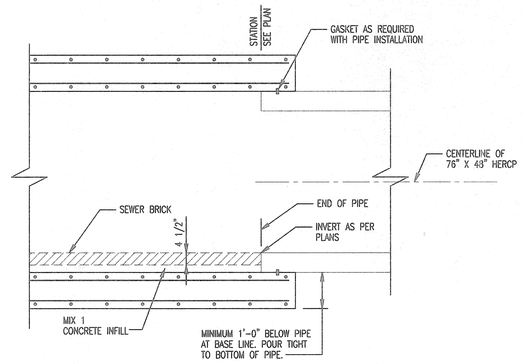

SECTION 2/CP10

1/2" = 1'-0"

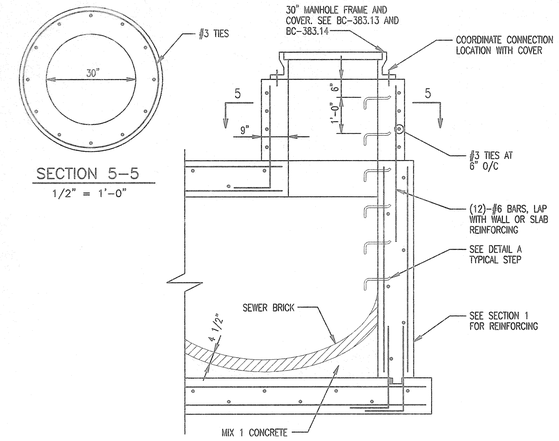

SECTION 5-5

1/2" = 1'-0"

SECTION 3/CP10

1/2" = 1'-0"

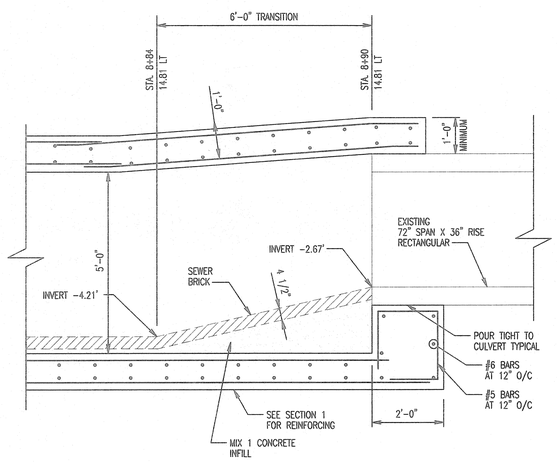

SECTION 4/CP10

1/2" = 1'-0"

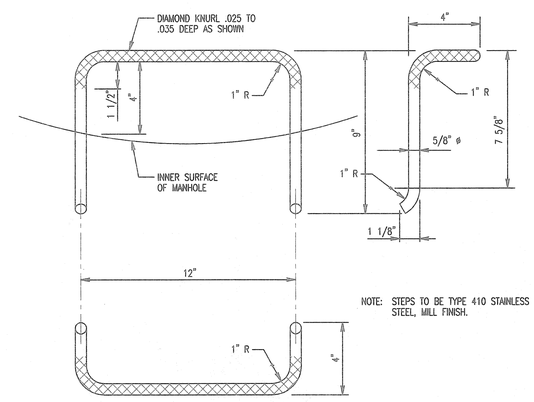

NOTE: STEPS TO BE TYPE 410 STAINLESS STEEL, MILL FINISH.

DETAIL A

3" = 1'-0"

CAUTION:
IF THIS DRAWING IS A REDUCTION, USE THE GRAPHIC SCALES.

1/2"=1'-0" 0 1 2 4 6

3"=1'-0" 0 6" 1'

Book Nos:
x-914, x-939, x-939'A', x-939'B'

DRAWN BY _____

EXAMINED BY _____

WHITNEY BAILEY COX MAGNANI
CONSULTING ENGINEERS
849 FAIRMOUNT AVENUE
SUITE 100
BALTIMORE, MD 21286
(410) 512-4500

CP-10

CITY OF BALTIMORE
DEPARTMENT OF PUBLIC WORKS
BUREAU OF TRANSPORTATION

CONTRACT NO. TR99037
RECONSTRUCTION OF LANCASTER STREET
AND CONSTRUCTION OF
CAROLINE STREET PUMPING STATION

DOUBLE BRICK AND CONCRETE CURVE
AND
DOUBLE BRICK AND CONCRETE "Y" COMBINATION
SECTIONS AND DETAILS

SCALE: AS NOTED | DATE: APRIL 22, 1999

TRANSPORTATION ENGINEERING DIVISION | SHEET 49 OF 66

REVISIONS			
NO.	DESCRIPTIONS	DATE	BY

ITY NOTES:

TRACTOR SHALL NOT COMMENCE WITH THE WORK CONSTRUCTION OF THE STORM DRAINS OR 6" WATER IN CAROLINE STREET UNTIL AFTER ALL WORK RELATING THE RELOCATION OF THE GAS LINE IN CAROLINE STREET BEEN COMPLETED. THE GAS LINE WILL BE RELOCATED OTHERS, AND IS NOT PART OF THIS CONTRACT.

GENERAL WATER NOTES AND SHUT-OFF DIAGRAM SHEET RB-12 AND RB-13.

CONTRACTOR SHALL GIVE WRITTEN NOTICES, AS APPROVED THE RESIDENT ENGINEER, TO ALL CONSUMERS AFFECTED BY SHUTDOWN OF THEIR WATER SERVICE(S). A MINIMUM OF EE (3) DAYS NOTICE PRIOR TO THE ACTUAL WORK IS REQUIRED. ER SERVICES FOUR (4) INCHES AND LARGER MAY NEED TO BE EDULED AT NIGHT OR DURING WEEKENDS UNLESS THE ECTED CONSUMERS AGREE TO THE SCHEDULE AS PROPOSED THE CONTRACTOR.

STRAPPING DETAIL

NOT TO SCALE

PROFILE - RELOCATED 6" WATER SERVICE

SCALE : HORIZ. 1"=5'
VERT. 1"=2'

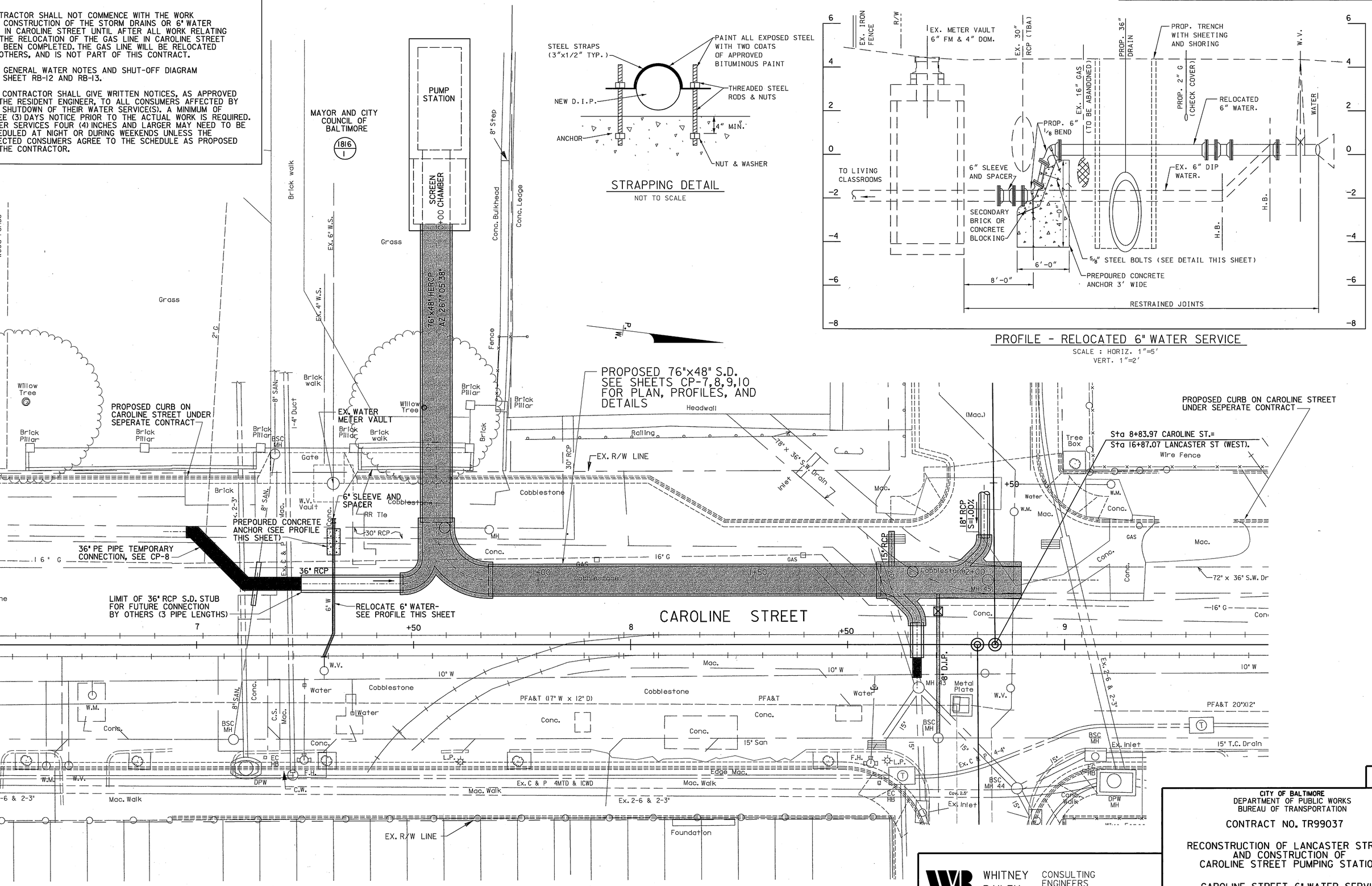

P.F.W.

B.D.J.

CP-7A

CITY OF BALTIMORE
DEPARTMENT OF PUBLIC WORKS
BUREAU OF TRANSPORTATION

CONTRACT NO. TR99037

RECONSTRUCTION OF LANCASTER STREET AND CONSTRUCTION OF CAROLINE STREET PUMPING STATION

CAROLINE STREET 6" WATER SERVICE RELOCATION PLAN AND PROFILE

SCALE: 1"=10'

TRANSPORTATION ENGINEERING DIVISION | SHEET 66A OF 66

WHITNEY BAILEY COX MAGNANI
CONSULTING ENGINEERS
849 FAIRMOUNT AVENUE
SUITE 100
BALTIMORE, MD 21286
(410) 512-4500

FILE: p:\1997\97127011\ut01pump.dgn
DATE: 07-May-99 11:38

REVISIONS			
NO.	DESCRIPTIONS	DATE	BY
1	ADD SLEEVE AND SPACER AT EASTERN TIE-IN, MODIFY LOCATION OF HORIZONTAL BENDS, ADD STATIONING	6/18/99	PFW

UTILITY NOTES:

1. CONTRACTOR SHALL NOT COMMENCE WITH THE WORK TO CONSTRUCT THE STORM DRAIN OR 6" WATER LINE IN CAROLINE STREET UNTIL AFTER ALL WORK RELATING TO THE RELOCATION OF THE GAS LINE IN CAROLINE STREET HAS BEEN COMPLETED. THE GAS LINE WILL BE RELOCATED BY OTHERS, AND IS NOT PART OF THIS CONTRACT. THE CONTRACTOR SHALL CONTACT JIM WOOD OF BG&E AT (410)291-4839 TO COORDINATE CONSTRUCTION SCHEDULE FOR THE GAS LINE
2. FOR GENERAL WATER NOTES AND SHUT OFF DIAGRAM SEE SHEET RB-12 AND RB-13.
3. THE CONTRACTOR SHALL GIVE WRITTEN NOTICES, AS APPROVED BY THE RESIDENT ENGINEER, TO ALL CONSUMERS AFFECTED BY THE SHUTDOWN OF THEIR WATER SERVICE(S). A MINIMUM OF THREE (3) DAYS NOTICE PRIOR TO THE ACTUAL WORK IS REQUIRED. WATER SERVICES FOUR (4) INCHES AND LARGER MAY NEED TO BE SCHEDULED AT NIGHT OR DURING WEEKENDS UNLESS THE AFFECTED CONSUMERS AGREE TO THE SCHEDULE AS PROPOSED BY THE CONTRACTOR.

STRAPPING DETAIL

NOT TO SCALE

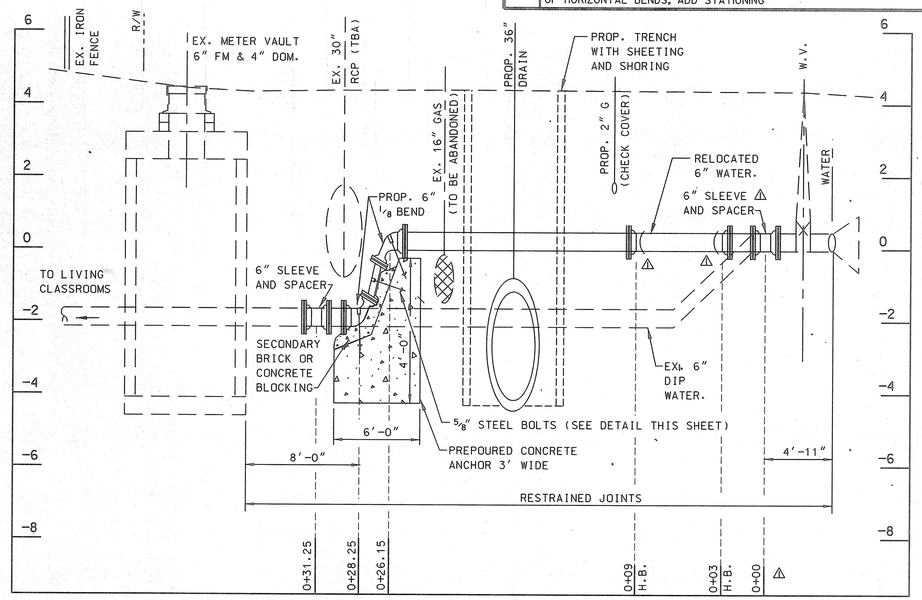

PROFILE - RELOCATED 6" WATER SERVICE

SCALE : HORIZ. 1"=5'
VERT. 1"=2'

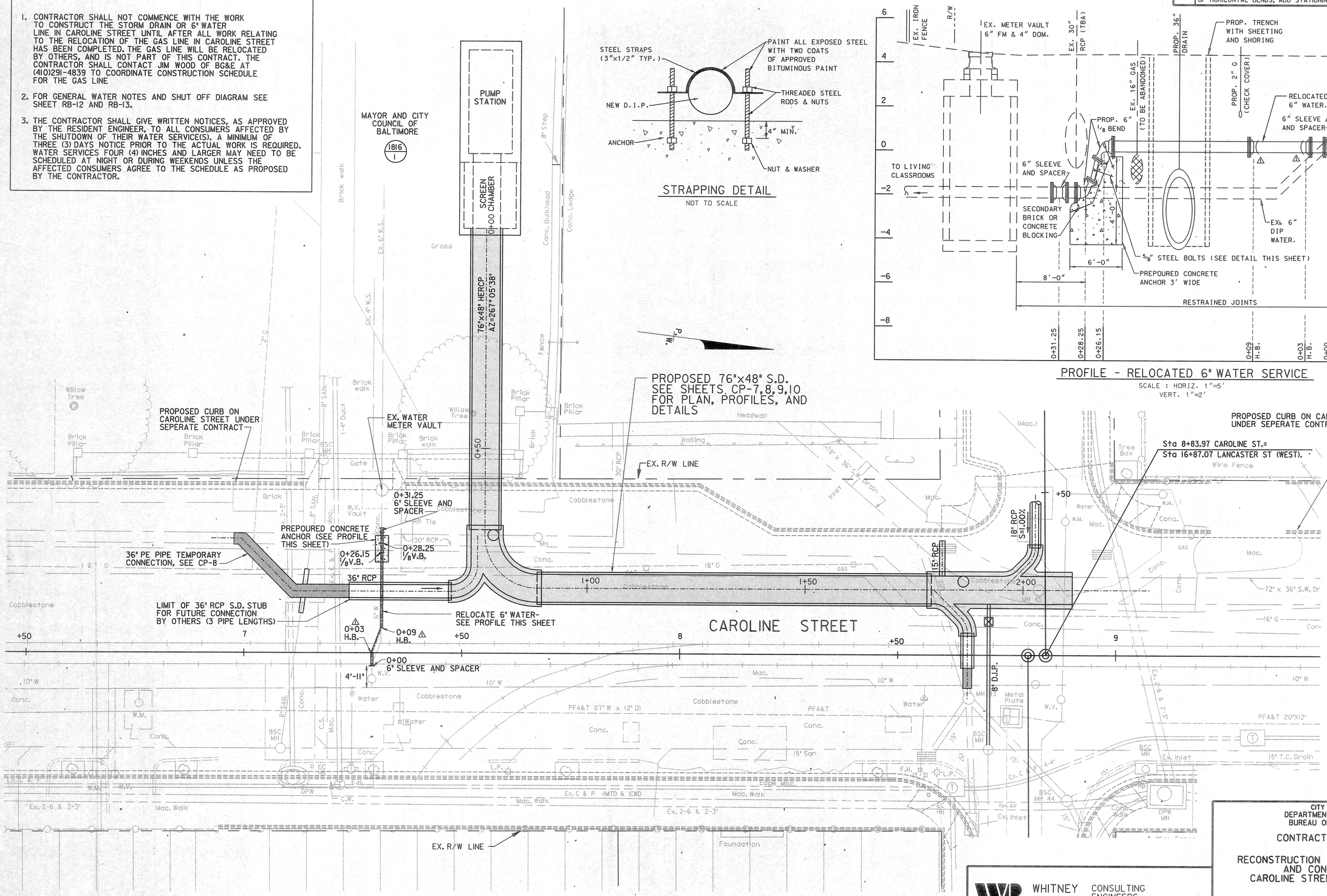

CP-7A

WHITNEY BAILEY COX MAGNANI
CONSULTING ENGINEERS
849 FAIRMOUNT AVENUE
SUITE 100
BALTIMORE, MD 21286
(410) 512-4500

CITY OF BALTIMORE
DEPARTMENT OF PUBLIC WORKS
BUREAU OF TRANSPORTATION

CONTRACT NO. TR99037

RECONSTRUCTION OF LANCASTER STREET AND CONSTRUCTION OF CAROLINE STREET PUMPING STATION

CAROLINE STREET 6" WATER SERVICE RELOCATION PLAN AND PROFILE

SCALE: 1"=10'

TRANSPORTATION ENGINEERING DIVISION | SHEET 66AR OF 66

DRAWN BY P.F.W.
EXAMINED BY B.D.J.

FILE: p:\1997\9712701\dgn\urt01pump.RDL
DATE: 15-Jun-99 10:30