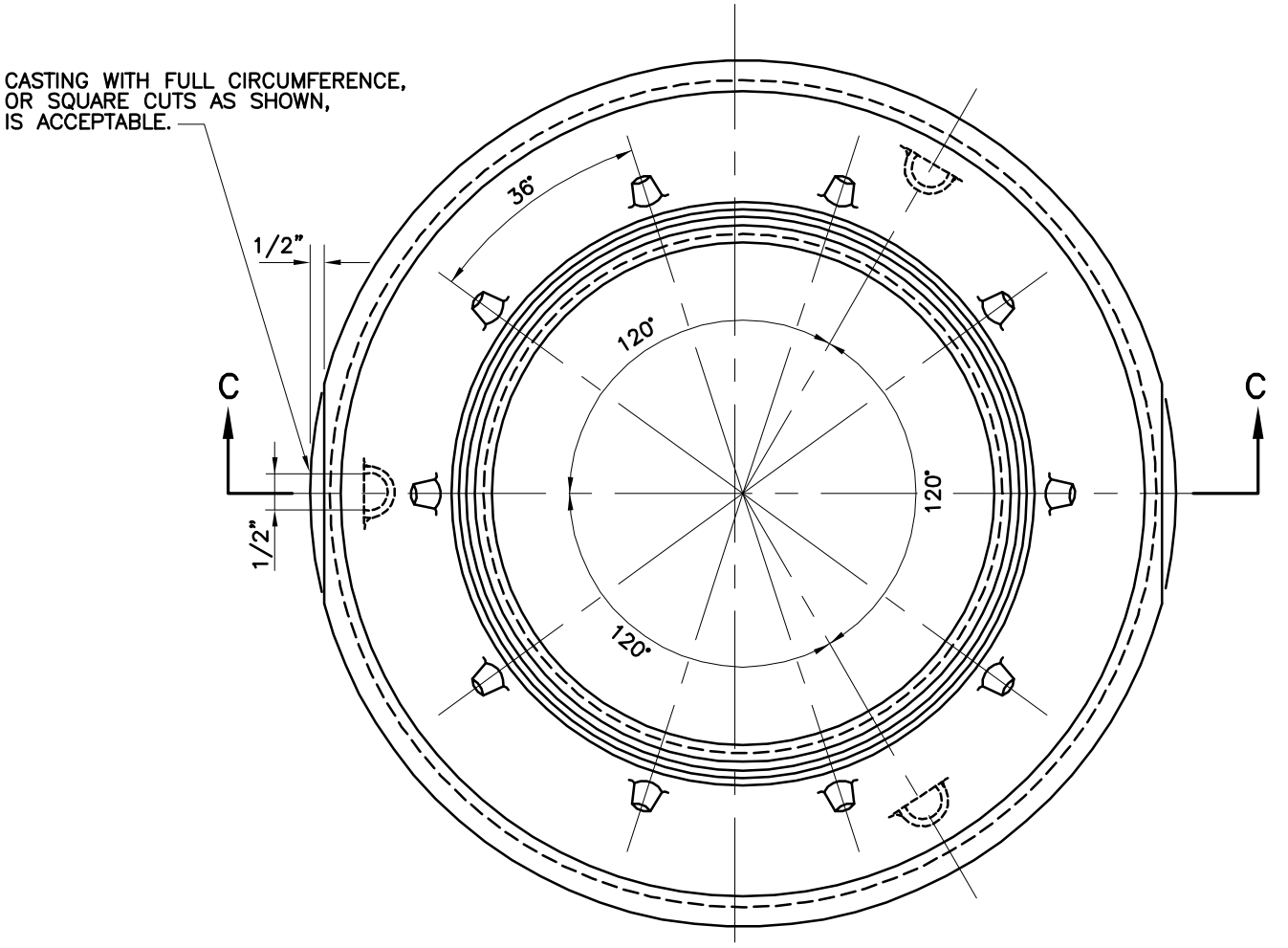

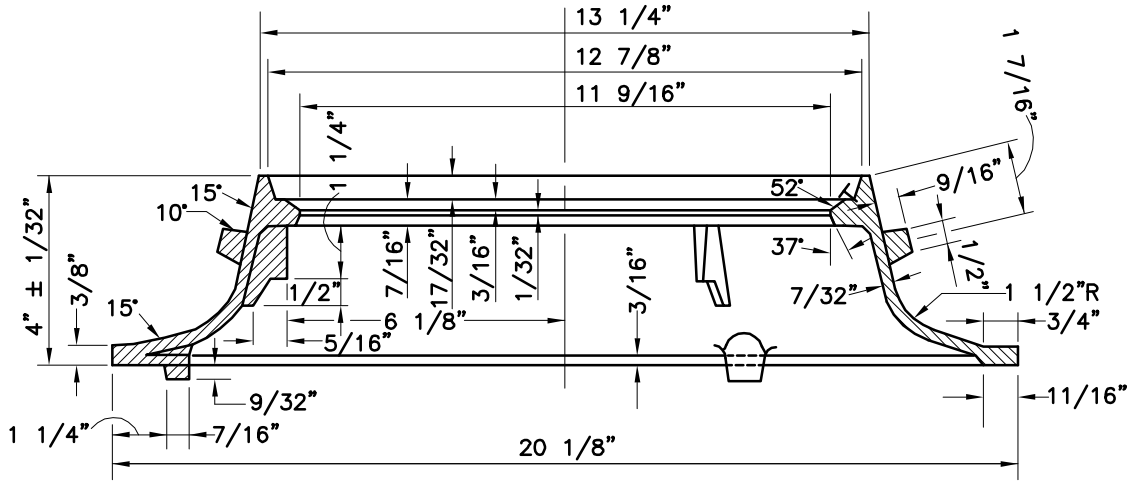

SECTION C–C

NOTES:

1. AVERAGE WEIGHT OF FRAME – 22 LBS.
2. MATERIAL SHALL BE CAST IRON, 21,000 PSI TENSILE STRENGTH.

CITY OF BALTIMORE 1797	APPROVED: HEAD, BUREAU OF WATER AND WASTEWATER; DIRECTOR, DEPARTMENT OF PUBLIC WORKS	CITY OF BALTIMORE DEPARTMENT OF PUBLIC WORKS BUREAU OF WATER AND WASTEWATER	ISSUED	REVISED	REVISED
			3 / 2008		
		STANDARD 12" METER FRAME	STANDARD NO. BC 873.01		
			SCALE : NONE	SHEET 1 OF 3	